Design and Development of Rotary Accumulator Table

Nikhil Gupta ,Chirag Kadamba, Eashan Karkhanis,Pranot Navalollu

Department of Meachanical Engineering,

Vidyavardhini's College of Engineering and Technology, Vasai

University of Mumbai, India

***Abstract*-- A rotary conveying, accumulating and qualifying mechanism for accomodating articles of various shapes. In our case bearing cup. Our aim is to design and develop rotary accumulation table consisting of round table made of ultrahigh molecular weight nylon(polyethene).It also consist of Asynchronous motor and the power will be transmitted with the help of chain drive. It acts as a buffer or accumulator when input feed is greater than output feed also helps in arranging and stacking of finished products. It acts as a buffer or accumulator when input feed is greater than output feed also helps in arranging and stacking of finished products. A stand-alone parts accumulator that can be retrofit as a unitary add-on to an existing production line. The prototype is to be made in same scale (1:1) of the actual model in order to save cost and also prove effectiveness of process. The variable frequency drive will be used to control the speed and torque of the motor by varying motor input frequency and voltage. The turntable used in industries is of ultrahigh molecular weight nylon(polyethene)material, since this material is quite expensive hence for our 1:1 model we will using acrylic , also support is made of extruded aluminium which will be replaced by mild steel. A lid will be attached to the central overhead bridge which is connected to a sensor, and if the lid is raised during the operation the system comes to a halt and thereby ensuring safety of the worker. Further improvements in the working of the prototype will be our objective and also the improvement in the actual number of components coming out. Additionally the various types of materials used in manufacturing and their effect on our prototype will be analysed.**

***Keywords*—Rotary Accumulator, buffer.**

I. INTRODUCTION

In an assembly line, we have often seen that due to some malfunction of any unit in an assembly line the production rate is altered. Thus by making use of this table, it will accomodate time for the worker or technician to rectify and give solution to the problem faced. It will accumulate the product until the fault is rectified hence there will be no alteration in production. Rotary tables, also referred to as accumulation table or unscrambling table, were designed to support a variety of conveyor system requirements. They are often used with round containers, such as bottles, to accumulate or unscramble bulk, so that they can be discharged in a single file line, In our case bearing cups. Rotary tables enable the collation and accumulation of products from conveyor lines and packing areas creating a buffer zone on a low speed line and also providing accumulation at the end of a production line. Ideal for areas that are not large enough or not suitable for an automated system.

II. DESIGN METHODOLOGY

For starting the design, we got input as diameter of cup. Then we calculated the number of cups that can accommodate on the table due to centrifugal force the cups will be arranged circumferentially from where it goes for corresponding operation.the next step was the calculation of the total mass the components invoved are turn-table flapper to guide the product support where the flapper is pinned.thus the total mass was calculated.the mainly concerned mechanism is the speed of the turntable. the speed has to be accordingly selected because if the speed is increased more than the desired the components will be thrown out and we will not get the products at output. motor selection is a challenging part as by the torque and power to be consumed we selected appropriate motor after considering all the losses.since the angular speed of table is very low we reduced the speed coming from motor through chain mechanism. thus chain drive was designed accordingly. next part is the bearing design to determine life of bearing before it fails. lastly the frame which accommodates the entire project was designed successfully from aesthetic point of view thus material was so chosen. For easy transportation and mobility we implanted castor wheels with levelling mount on it .

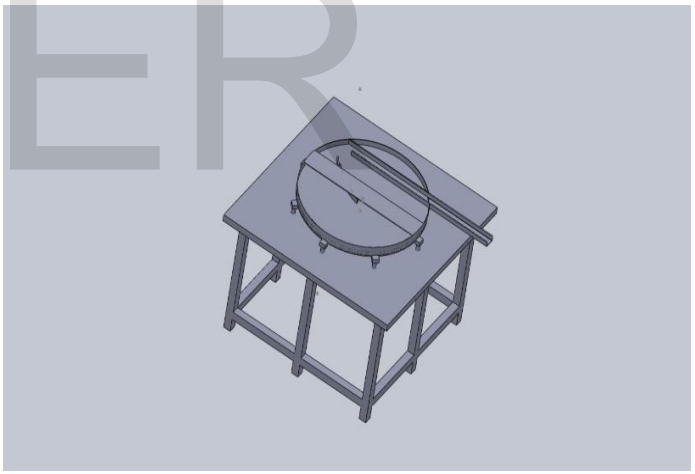

III. OVERVIEW OF PROPOSED SYSTEM

The system works on the simple principle of a component or product when placed on the rotating platform tends to move towards the circumference. Here, in our case we are controlling the speed of the platform along with providing a deflection to the products which will align them at the start of the assembly line.

The equipment which we proposed will enable the hollow product upto a certain depth, in our case a bearing cup. To check for depth at the end of the conveyor we have an LVDT placed which will enable us to check the correct orientation of the product. This will enable us to check for the error in orientation

coupled with the accurate entry for the final assembly by reducing the error at the start.. Also, we have an adjustable lever at the height of the product which when raised stops the rotating action of the turn table. This enables us to have a specific count of the number of components in alignment waiting for assembly at a given point in time. This can be varied by adjusting the position of the lever but mainly depends on the number of products actually being worked upon on the assembly line at a given point of time.

Modes of operation: The product can be used in broad based industries which increases the scope of product. The use of Ultra High Density molecular Nylon as the base plate material enabled us to provide high abrasion resistance to mirror finished products as well as use in pharmaceutical industry which requires materials that do not react with the environment or the products, The Rotary Accumulator can also be used in Food Industry which enables us to use the same product in a variety of industries without changing the overall design or materials of the Rotary Accumulator.

IV. DESIGN AND IMPLEMENTATION

A. The start of the deign involved of devising a mechanism which would be effective in accumulating and aligning the desired products in such a way that the platform would act as a buffer as well as the movement would generate an alignment for further assembly.
B. Hence, we came up with the implementation of the Rotary Accumulator and which served the purpose. Another challenge which we faced was the selection of the turn table material which would ensure minimum scratches on the surface of the products to be assembled which usually involved high mirror finished products.
C. The next requirement was the limitation of the number of products entering at a given point of time for assembly and to avoid the cramming up of the products at the start of the assembly, for which we installed a lever which when raised would automatically stop the table from rotating. As soon as the products for assembly free up the lever falls down thus triggering the turn table to start.
D. Selection of light and strong materials also enabled us to have significant weight reduction. Reduction in weight along with castor wheels at the base enabled us to make it fixable and easy for transportation. This way we can fix the turn Table at any assembly improving the scope of the product.

.

V. RESULT ANALYSIS AND DISCUSSION

The Final product which we delivered at the industry enabled them to increase the scope of use and any kind of mass scale assembly involving a single type of product, we can use the Rotary Accumulator. This also enabled the industry to use the same product for the different kinds of customers having their own industrial needs without major modifications every time the customer approaches. Just by setting the lever positioning and the range of LVDT in the Computer (Depends if the product is hollow or not). We can vary the variety of products that can be used from industry to industry.

VI. CONCLUSION

The Rotary Accumulator modified design along with proposed changes has been successfully developed at the Feed Tech Pvt Ltd industry and the product has been dispatched at the industry within the stipulated time period. Cost cutting along with weight reduction was achieved which enabled easy transportation and more feasibility of production.

ACKNOWLEDGEMENT

We gratefully acknowledge Assistant Prof. Priti Vairagi for her valuable suggestion on the Design of the Rotary Accumulator.

Sincere Thanks to Mr. Ashish Gaikwad for his unparallel support and teachings which enabled us to implement the concept of Rotary Accumulator involving modifications at his industry.

REFERENCES

[1 Mikael Akerholm, Jan Carlson, Johan Fredriksson, Hans Hansson, John Hakansson, Anders Moller, Paul Pettersson, and Massimo Tivoli. The SAVE approach to component-based development of vehicular systems. Journal of Systems and Software, 80(5):655–667, May 2007.

[2] R. Alur, D. Thao, J. Esposito, H. Yerang, F.Ivancic, V. Kumar, P. Mishra, G.J. Pappas, and O.Sokolsky. Hierarchical modeling and analysis of embedded systems. Proceedings of the IEEE, 91(1):11–28, January 2003.

[3] Kurt H. Hoppmann, Falls Church;James G. Lin, Springfield; Patent Number: 4,723,661

[4] Ultra high polyethylene molded article for artificial joint and method of preparing the same Patent No.: US 6,168,626 B1.

[6] A. Wodarczyk-Fligier, L.A. Dobrzaski, M. Adamiak, Influence of heat treatment on properties and corrosion resistance of Al-composite, Journal of Achievements inMaterials and Manufacturing Engineering 21/1 (2007) 55-58ā